PRODUCT INFORMATION PACKET

Model No: 286TTFCD6026
Catalog No: GT1031A
Globetrotter® General Purpose Motor, 30 & 25 HP, 3 Ph, 60 & 50 Hz, 208-230/460 & 190/380 V, 1800 & 1500 RPM, 286T Frame, TEFC

Regal and Marathon are trademarks of Regal Rexnord Corporation or one of its affiliated companies.
Â©2023 Regal Rexnord Corporation, All Rights Reserved. MC017097E

Nameplate Specifications

Phase	3	Output HP	30 & 25 Hp
Output KW	22.4 & 18.7 kW	Voltage	208-230/460 & 190/380 V
Speed	1770 & 1470 rpm	Service Factor	1.15 & 1.15
Frame	286T	Enclosure	Totally Enclosed Fan Cooled
Thermal Protection	No Protection	Efficiency	93.6 & 92.7 %
Ambient Temperature	40 °C	Frequency	60 & 50 Hz
Current	78-71/35.5 & 71/35.5 A	Power Factor	84
Duty	Continuous	Insulation Class	F
Design Code	B	KVA Code	G
Drive End Bearing Size	6311	Opp Drive End Bearing Size	6211
UL	Listed	CSA	Y
CE	Y	IP Code	55
Number of Speeds	1	Hazardous Location	DIVISION 2 T2B

Technical Specifications

Electrical Type	Squirrel Cage Inverter Rated	Starting Method	Part Wdg Start Low Volt Only & Wye Start Delta Run Or Inverter
Poles	4	Rotation	Reversible
Resistance Main	.27 Ohms	Mounting	Rigid Base
Motor Orientation	Horizontal	Drive End Bearing	Ball
Opp Drive End Bearing	Ball	Frame Material	Cast Iron
Shaft Type	T	Overall Length	28.14 in
Shaft Diameter	1.875 in	Shaft Extension	4.62 in
Assembly/Box Mounting	F1/F2 CAPABLE	Inverter Load	CONSTANT 10:1/VARIABLE 10:1
Outline Drawing	SS620704-200	Connection Drawing	EE7308AA

This is an uncontrolled document once printed or downloaded and is subject to change without notice. Date Created:06/21/2023

DASH NO.	B	C	E	2E	2F	2FF	BA	BS	MOUNTING	FRAME
100	10.83	26.64	5.50	11.00	---	9.50	4.75	4.75	F1 OR F2	284T
200	12.68	28.14			9.50	11.00		5.50		284/286T

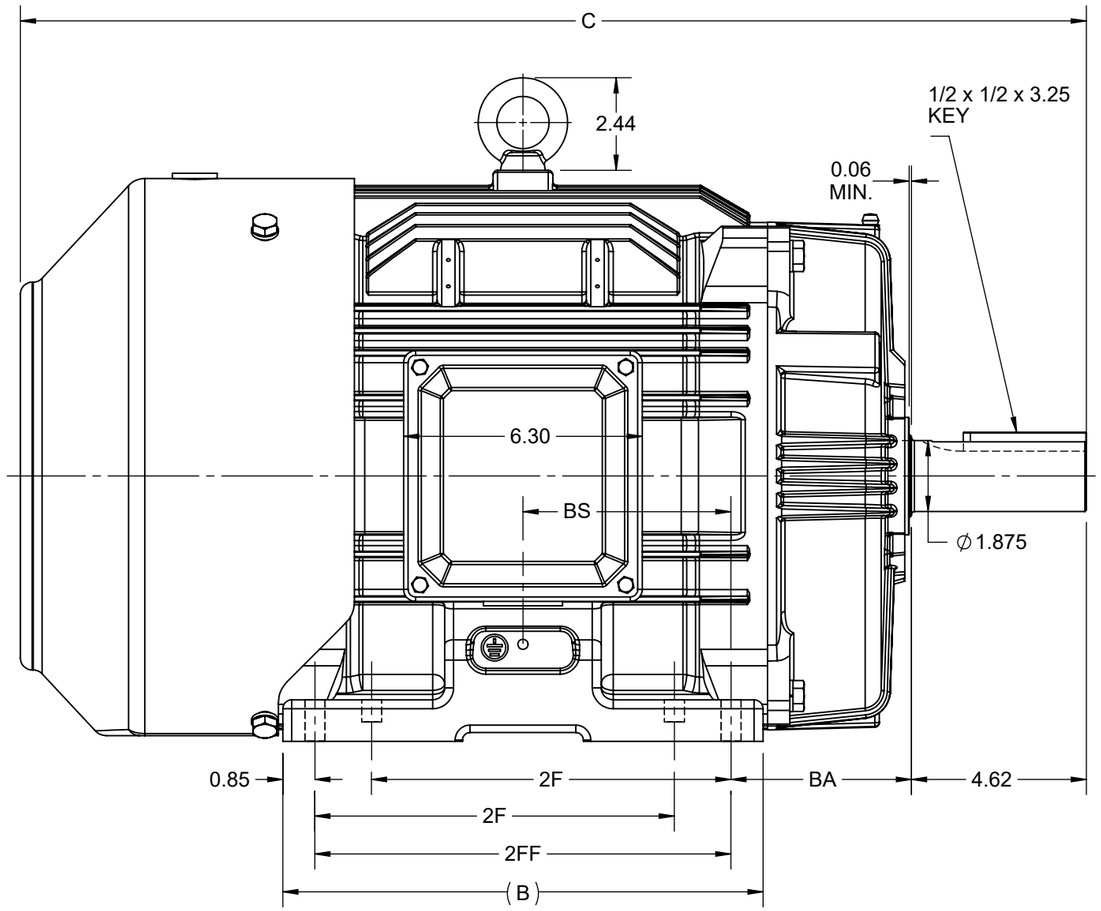

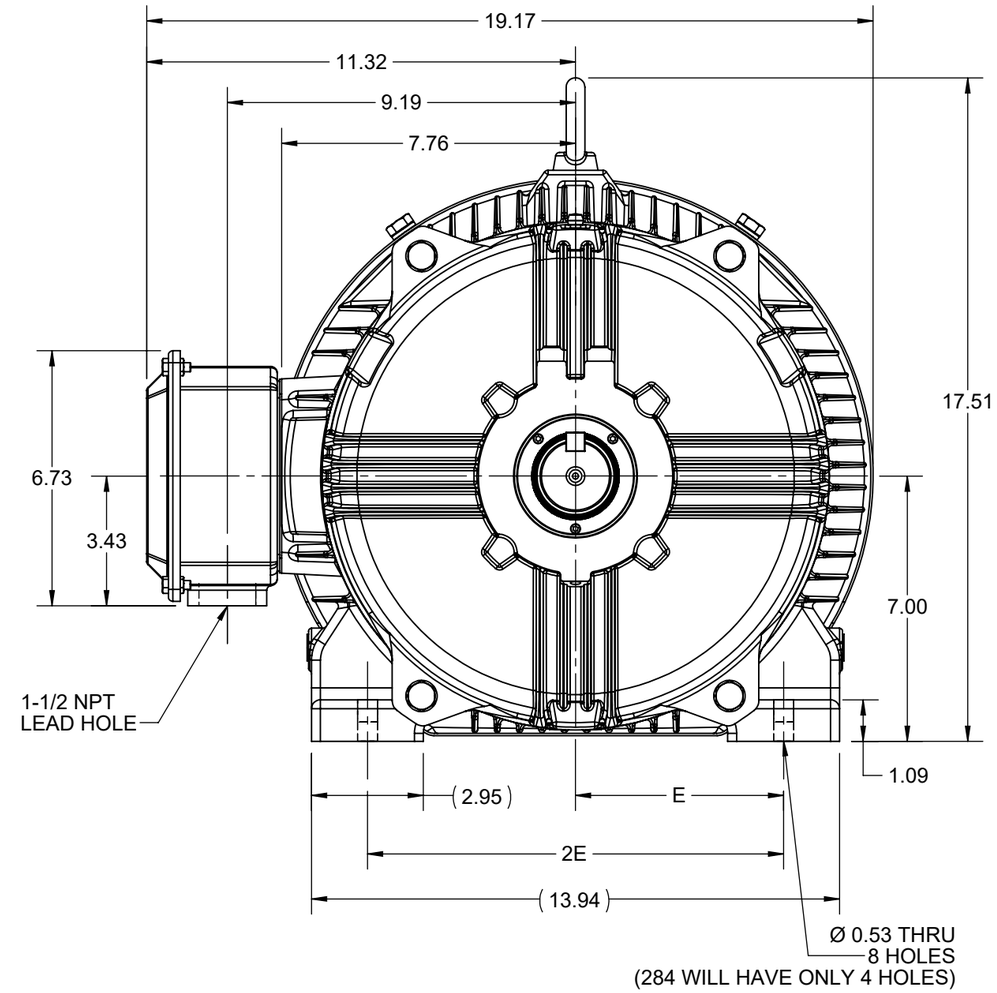

F2 VIEW

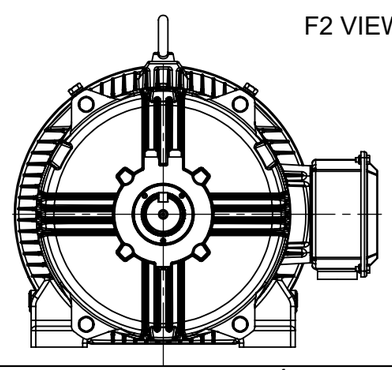

DRAWING REVISION	REVISION BY	REV DATE/© DATE
C	VS	27-10-2020
ECO: CR-0000305	APPROVED BY: GNK	DATE: 27-10-2020
ECO DESCRIPTION: DRAWING UPDATED		

COPYRIGHT (PER REVISION DATE) REGAL BELOIT AMERICA, INC. ALL RIGHTS RESERVED. PROPRIETARY AND CONFIDENTIAL INFORMATION - THIS DOCUMENT IS THE PROPERTY OF REGAL BELOIT AMERICA, INC. ("OWNER") AND CONTAINS OWNER'S PROPRIETARY INFORMATION. ANY PERSON, CORPORATION OR OTHER FIRM RECEIVING IT IS DEEMED, BY RECEIVING IT, TO AGREE THAT IT, AND/OR ANY PART OF IT, SHALL NOT BE DISCLOSED TO ANY PERSON, CORPORATION OR OTHER ENTITY, DUPLICATED, AND/OR USED, EXCEPT AS EXPRESSLY APPROVED IN WRITING IN ADVANCE BY OWNER. THIS DOCUMENT SHALL BE RETURNED TO OWNER UPON REQUEST. IT MAY BE SUBJECT TO CERTAIN RESTRICTIONS UNDER APPLICABLE EXPORT CONTROL LAWS AND REGULATIONS.

PRIMARY DIMENSIONS ARE INCH
mm DIMENSIONS IN [BRACKETS]
ARE FOR REFERENCE ONLY

DRAWN BY	MR
DATE	4/5/2015
APPROVED BY	KRK
DATE	4/5/2015
REFERENCE	
THIRD ANGLE PROJECTION	

Regal Beloit America, Inc.

DESCRIPTION: OUTLINE
284/286T FR-TEFC-CAST IRON

MATERIAL | PROCESS/FINISH

SIZE: B | DRAWING NUMBER: SS620704 | SHEET: 1 OF 1

Uncontrolled Copy

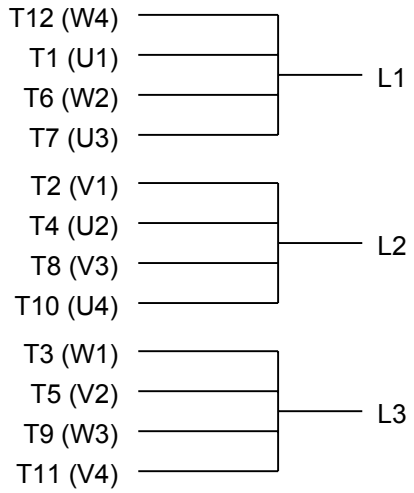

LOW VOLTAGE

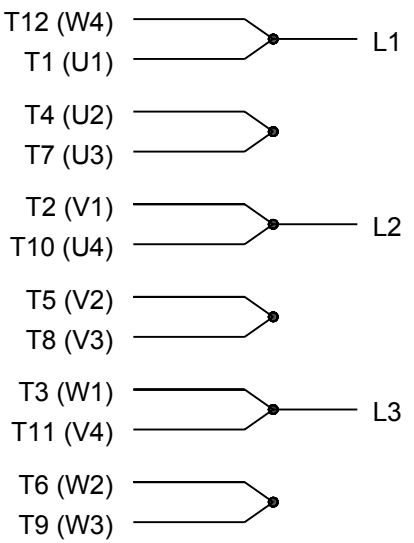

HIGH VOLTAGE

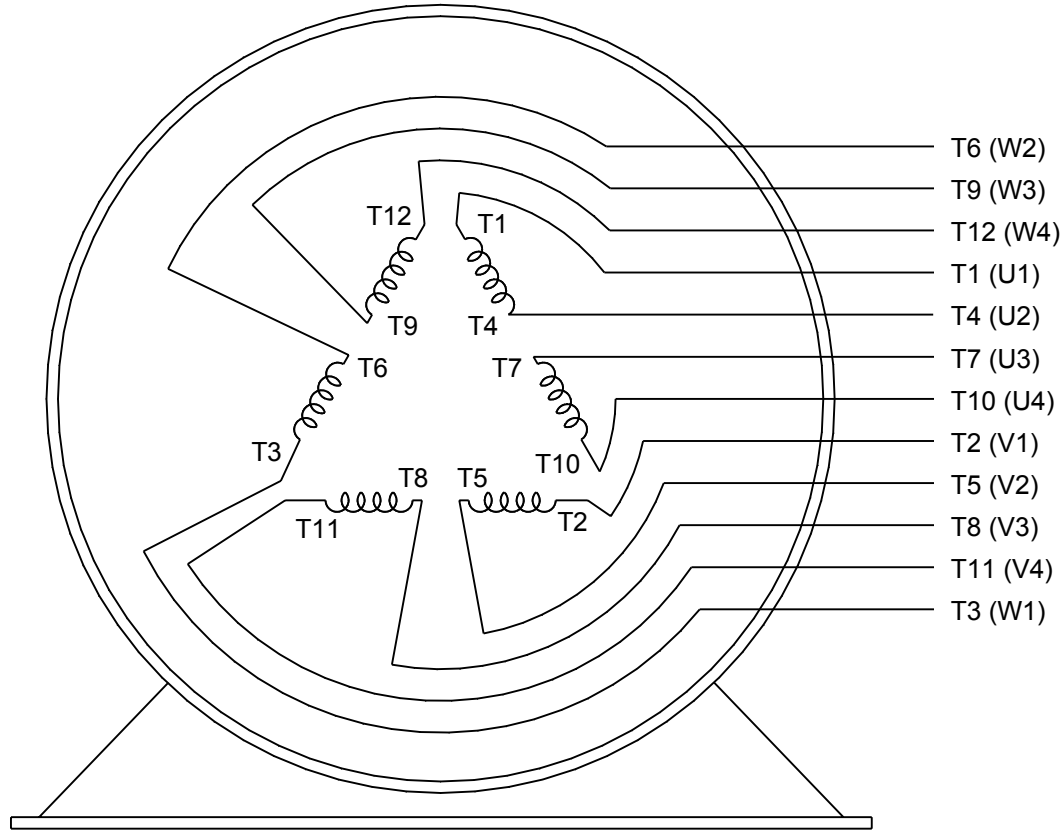

VIEW OF TERMINAL END

DRAWING REVISION K	REVISION BY AJW	DATE 07-17-2015		DRAWN BY LZ	Regal Beloit America, Inc.
ECO ECO-0081632	APPROVED BY T. VUE	DATE 07-17-2015		DATE 01-12-1994	
ECO DESCRIPTION REV'D IEC MARKINGS PER IEC 60034-8				APPROVED BY GK	DESCRIPTION CONN DIAGRAM-EXTERNAL 3Ø-2/1 DELTA-12 LEADS
				DATE 01-14-1994	
				REFERENCE	MATERIAL / PROCESS/FINISH
				THIRD ANGLE PROJECTION	SIZE A / DRAWING NUMBER EE7308AA / SHEET 1 OF 1

COPYRIGHT REGAL BELOIT AMERICA, INC. ALL RIGHTS RESERVED.
PROPRIETARY AND CONFIDENTIAL INFORMATION - THIS DOCUMENT IS THE PROPERTY OF REGAL BELOIT AMERICA, INC. ("OWNER") AND CONTAINS OWNER'S PROPRIETARY INFORMATION. ANY PERSON, CORPORATION OR OTHER FIRM RECEIVING IT IS DEEMED, BY RECEIVING IT, TO AGREE THAT IT, AND/OR ANY PART OF IT, SHALL NOT BE DISCLOSED TO ANY PERSON, CORPORATION OR OTHER ENTITY, DUPLICATED, AND/OR USED, EXCEPT AS EXPRESSLY APPROVED IN WRITING IN ADVANCE BY OWNER. THIS DOCUMENT SHALL BE RETURNED TO OWNER UPON REQUEST. IT MAY BE SUBJECT TO CERTAIN RESTRICTIONS UNDER APPLICABLE EXPORT CONTROL LAWS AND REGULATIONS.

Uncontrolled Copy

P.O. BOX 8003
WAUSAU, WI 54401-8003
PH. 715-675-3311

CERTIFICATION DATA SHEET

CUSTOMER:

CUSTOMER PO#:

ORDER #:

MODEL #: 286TTFCD6026 BB

CONN. DIAGRAM: A-EE7308AA

CUSTOMER PART #:

OUTLINE: SS620704-286

MOUNTING: F1/F2 CAPABLE

WINDING #: HE31804006 2

TYPICAL MOTOR PERFORMANCE DATA

HP	kW	SYNC. RPM	F.L. RPM	FRAME	ENCLOSURE	KVA CODE	DESIGN
30&25	22.4&18.7	1800	1775&1475	286T	TEFC	G	B

PH	Hz	VOLTS	AMPS	START TYPE	DUTY	INSL	S.F.	AMB°C
3	60/50	230/460&190/380	72.5/36.5&73/36.5	Y START D RUN OR INV	CONTINUOUS	F7	1.15/1.15	40

FULL LOAD EFF:	93.6&93	**3/4 LOAD EFF:**	93.6	**1/2 LOAD EFF:**	93	**GTD. EFF**	**ELEC. TYPE**
FULL LOAD PF:	83&84	**3/4 LOAD PF:**	78	**1/2 LOAD PF:**	67.5	93	SQ CAGE INV RATED

F.L. TORQUE	LOCKED ROTOR AMPS	L.R. TORQUE	B.D. TORQUE	F.L. RISE°C
89 **LB-FT**	434 / 217	178 **LB-FT** 200 %	227 **LB-FT** 255 %	65

SOUND PRESSURE @ 3 FT.	SOUND POWER	ROTOR WK^2	MAX. WK^2	SAFE STALL TIME	STARTS / HOUR	APPROX. MOTOR WGT
68 **dBA**	78 **dBA**	5.7 **LB-FT^2**	225 **LB-FT^2**	20 **SEC.**	2	492 **LBS.**

*** SUPPLEMENTAL INFORMATION ***

DE BRACKET TYPE	ODE BRACKET TYPE	MOUNT TYPE	ORIENTATION	SEVERE DUTY	HAZARDOUS LOCATION	DRIP COVER	SCREENS	PAINT
STANDARD	STANDARD	RIGID	HORIZONTAL	FALSE	DIVISION 2 T2B	FALSE	NONE	BLUE (ENAMEL)

BEARINGS		GREASE	SHAFT TYPE	SPECIAL DE	SPECIAL ODE	SHAFT MATERIAL	FRAME MATERIAL
DE	ODE						
BALL	BALL	POLYREX EM	T	NONE	NONE	1045 HOT ROLLED (C-204)	CAST IRON
6311	6211						

THERMO-PROTECTORS				THERMISTORS	CONTROL	SPACE HEATERS
THERMOSTATS	PROTECTORS	WDG RTDs	BRG RTDs			
NONE	NOT	NONE	NONE	NONE	FALSE	NONE **VOLTS**

*

N

O

T

E

S

*

INVERTER TORQUE: CONSTANT 10:1/VARIABLE 10:1

INV. HP SPEED RANGE: NONE

ENCODER: NONE
NONE NONE
NONE NONE PPR

BRAKE: NONE NONE
NONE P/N NONE
NONE NONE
NONE FT-LB NONE V NONE Hz

PREPARED BY: Anusha Muthyala
DATE: 09/24/2019 01:38:34 AM
FORM 3531 REV.3 02/07/99
** Subject to change without notice.

Uncontrolled Copy

Data Sheet

Date: 7/16/2020
Customer:
Attention:
Submitted by:

marathon® Motors

286TTFCD6026

Submittal

Data @ 460 V

Motor Load Data

Load	0%	25%	50%	75%	100%	115%	125%	LR	
Current (Amps)	13.0	15.2	20.5	27.5	35.5	40.5	44.0	215	
Torque (ft-lb)	0.00	22.0	44.0	66.5	89.0	103	112	169	
RPM	1800	1792	1785	1780	1770	1,765	1762	0	
Efficiency (%)		91.0	93.0	93.6	93.6	93.0	92.4		
P.F. (%)	4.5	50.0	72.0	81.0	84.0	85.0	86.0	36.0	

Motor Speed Data

	LR	Pull-Up	BD	Rated	Idle
Speed (RPM)	0	900	1650	1770	1800
Current (Amps)	215	180	129	35.5	13.0
Torque (ft-lb)	169	145	235	89.0	0.00

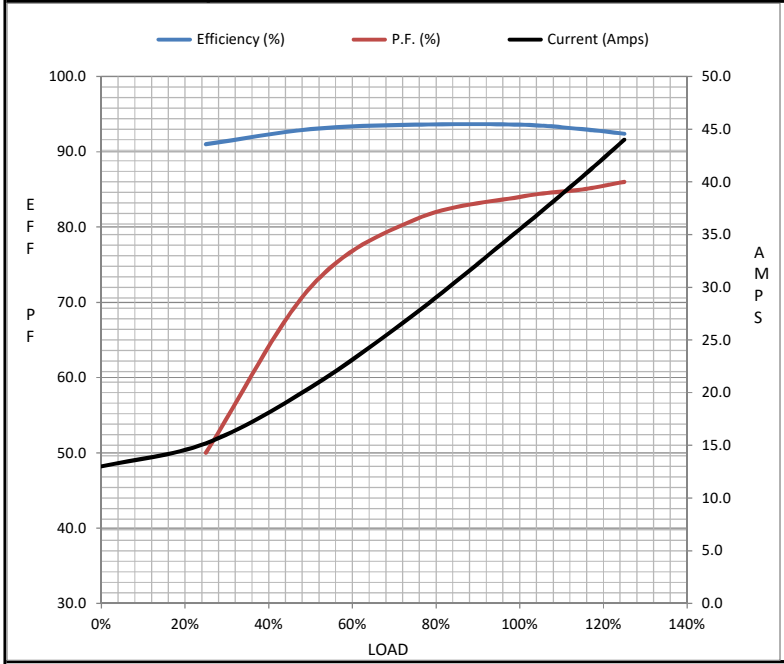

Information Block

HP	30.0	
Sync. RPM	1800	
Frame	286	
Enclosure	TEFC	
Construction	TFC	
Voltage	208-230/460#190/380	V
Frequency	60	Hz
Design	B	
LR Code letter	G	
Service Factor	1.15	
Temp Rise @ FL	65	° C
Duty	CONT	
Ambient	40	° C
Elevation	3,300	feet
Rotor/Shaft wk²	5.7	Lb-Ft²
Ref Wdg	HA31804013 NONE	
Sound Pressure @ 1M	75	dBA
VFD Rating	CONSTANT 10:1/VARIABLE 10:1	
Outline Dwg	037898-912	
Conn. Diag	EE7308AA	

Additional Specifications:
0
0

EQUIV CKT (OHMS / PHASE)

R1	R2	X1	X2	Xm
0.1750	0.1250	0.6710	0.9400	20.3180

Speed -Torque Curve

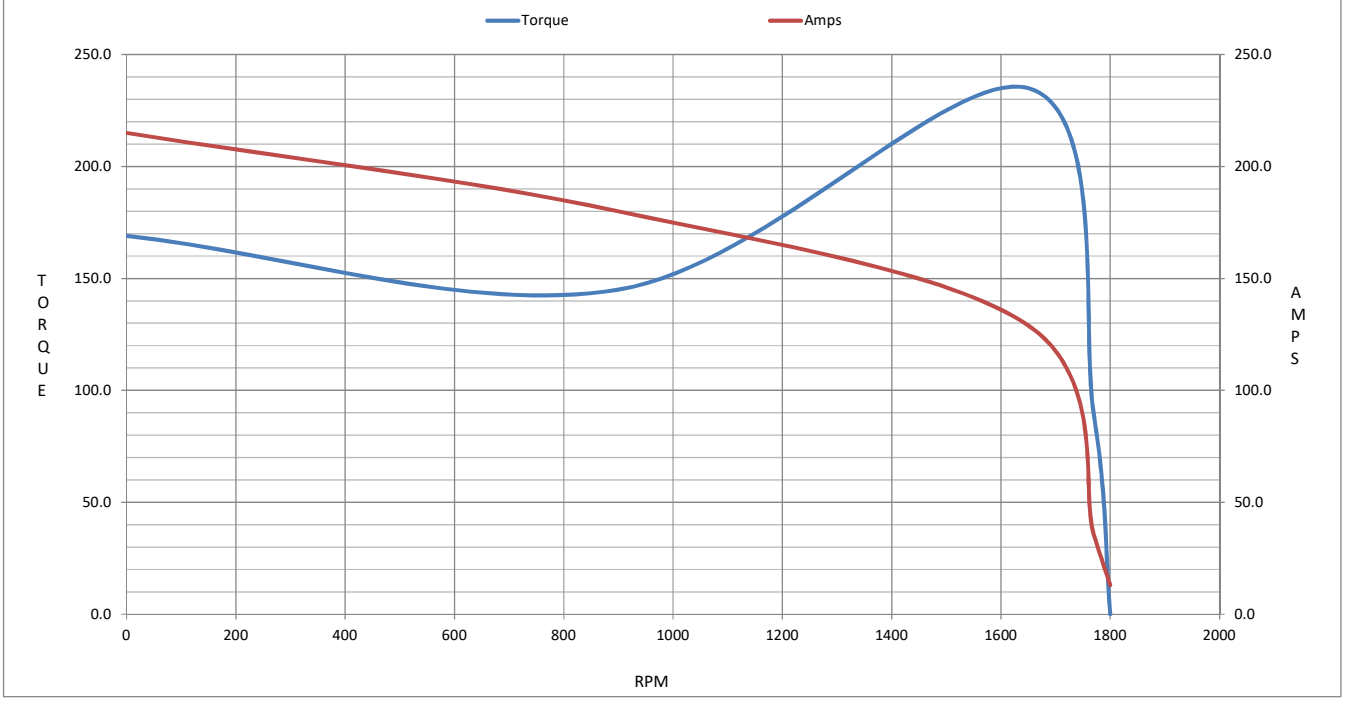

EC Declaration of Conformity

The undersigned representing
the manufacturer:

Regal Beloit America
100 East Randolph St.
Wausau, WI 54401

and the authorized representative
established within the Community:

Marathon Electric UK
6F Thistleton Road Ind. Estate
Market Overton
Oakham, Rutland LE15 7PP UK

are committed to providing customers with products that comply with applicable regulations and international protocols to which they are subject, including the requirements of the European Parliament Directive on the Harmonization of the laws relating to electrical equipment designed for use within certain voltage limits (2014/35/EU).

Regal Beloit America declares that the following product(s), to which this declaration relates, are in conformity with the relevant sections of the EC standards listed below.

This statement supersedes any statements previously issued pertaining to the product(s) listed below and is subject to change without notice.

Model No : 286TTFCD6026

(Model No. may contain prefix and/or suffix characters)

Catalog No : GT1031A

Rework No : N/A

Directives :

Low Voltage Directive 2014/35/EU

Harmonized Standards Used :

EN 60034-1: 2010 (IEC 60034-1: 2010)
EN 60034-5: 2001/A1:2007 (IEC 60034-5: 2000/A1:2006)

Authorized Representative:

Michael A. Logsdon
Vice President, Technology

Authorized Representative in the Community:

Julian Clark
Marketing Engineer

Created on 09/01/2022

CE 22