PRODUCT INFORMATION PACKET

Model No: 056T17D15850
Catalog No: FX32BK003
FLEX-IN-1™ General Purpose Motor, 1.50 & 1.50 HP, 3 Ph, 60 & 50 Hz, 230/460 & 190/380 V, 1800 & 1500 RPM, 56HC Frame, DP

Operational at 208-230/460 V @60HZ

Regal and LEESON are trademarks of Regal Rexnord Corporation or one of its affiliated companies.
©2025 Regal Rexnord Corporation, All Rights Reserved. MC017097E

Nameplate Specifications

Phase	3	Output HP	1.50 & 1.50 Hp
Output KW	1.1 & 1.1 kW	Voltage	230/460 & 190/380 V
Speed	1725 & 1425 rpm	Service Factor	1.15 & 1.00
Frame	56HC	Enclosure	Drip Proof
Thermal Protection	No Protection	Efficiency	86.5 & 84.1 %
Ambient Temperature	40 °C	Frequency	60 & 50 Hz
Current	4.4/2.2 & 5/2.5 A	Power Factor	75
Duty	Continuous	Insulation Class	F
Design Code	B	KVA Code	M
Drive End Bearing Size	6203	Opp Drive End Bearing Size	6203
UL	Recognized	CSA	Y
CE	Y	IP Code	22
Number of Speeds	1		

Technical Specifications

Electrical Type	Squirrel Cage Inverter Rated	Starting Method	Line Or Inverter
Poles	4	Rotation	Reversible
Resistance Main	0 Ohms	Mounting	Bolt-on Base
Motor Orientation	Horizontal	Drive End Bearing	Ball
Opp Drive End Bearing	Ball	Frame Material	Rolled Steel
Shaft Type	NEMA 56	Shaft Diameter	0.625 in
Assembly/Box Mounting	F1 F2/F3 CAPABLE	Inverter Load	CONSTANT 2:1
Connection Drawing	CDTD127	Outline Drawing	OL56100845-001

This is an uncontrolled document once printed or downloaded and is subject to change without notice. Date Created:07/28/2025

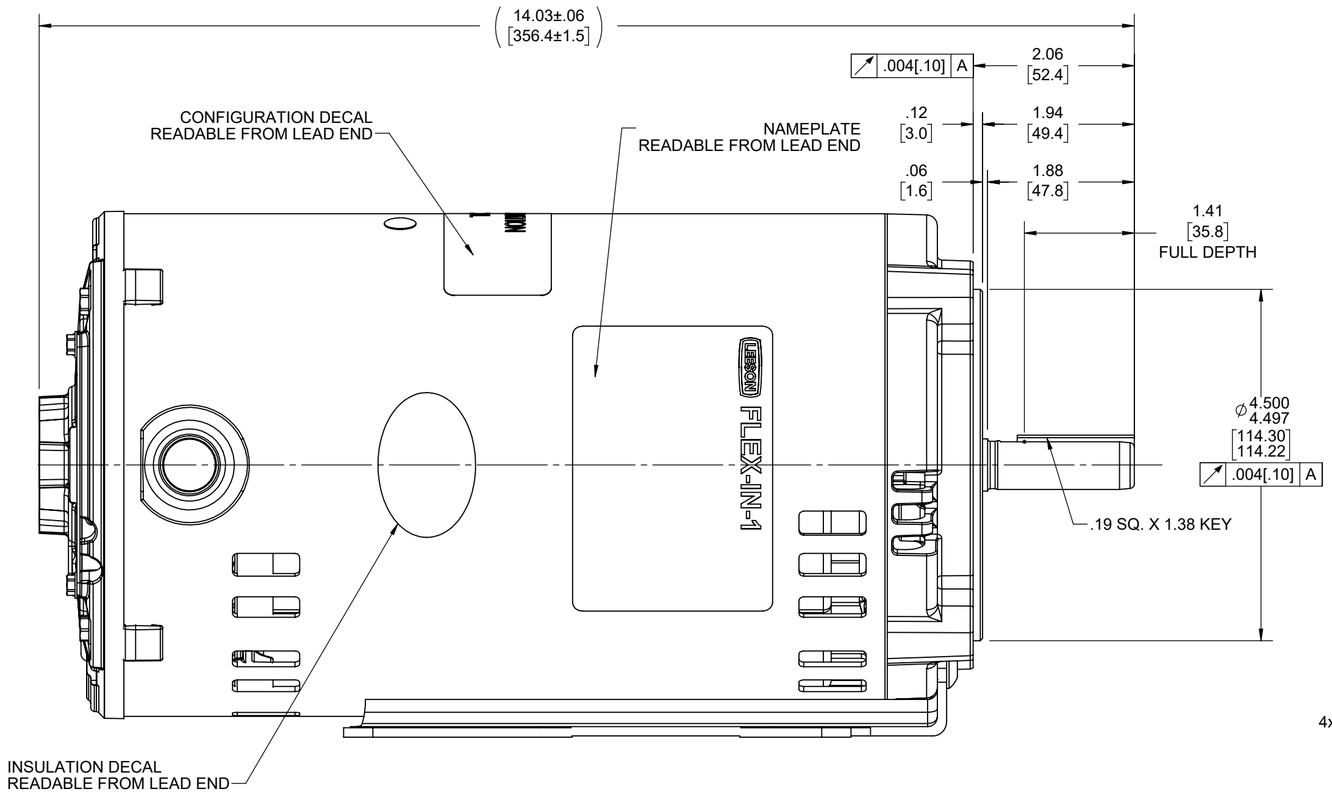

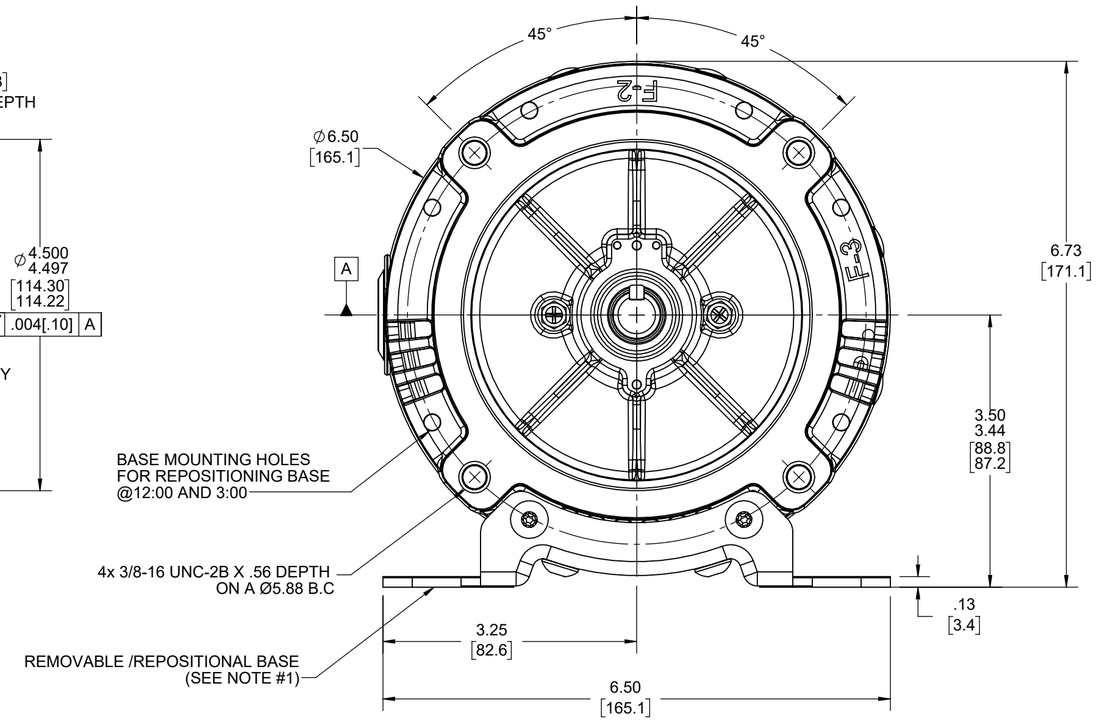

NOTES:

1) REMOVABLE / REPOSITIONAL BASE CAN BE REMOVED FOR C-FACE MOUNTING OR REPOSITIONED TO 12:00 OR 3:00 FACING SHAFT END OF MOTOR FOR NEMA F-2 OR F-3 CONDUIT BOX LOCATION.
2) KEY TO BE SHIPPED IN BAG WITH HOLE PLUGS AND BASE MOUNTING INSTRUCTION SHEET.

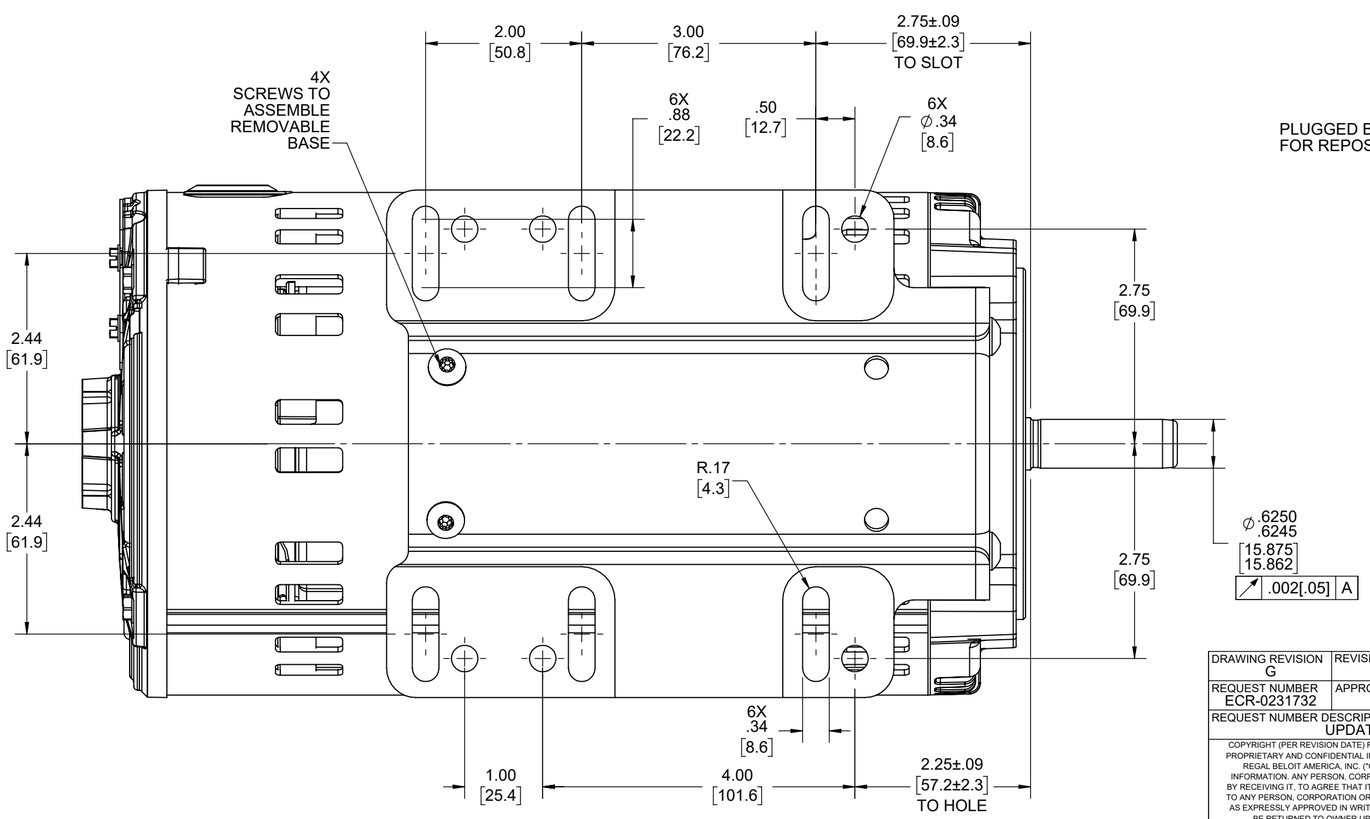

PLUGGED BASE MOUNTING HOLES
FOR REPOSITONING BASE @12:00 OR 3:00

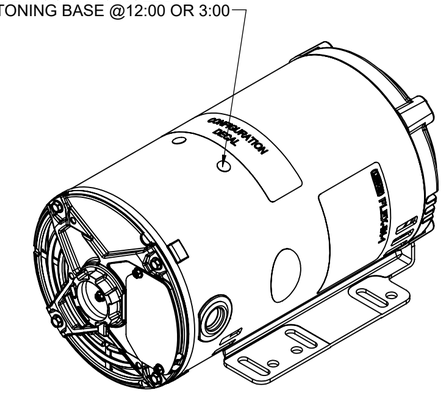

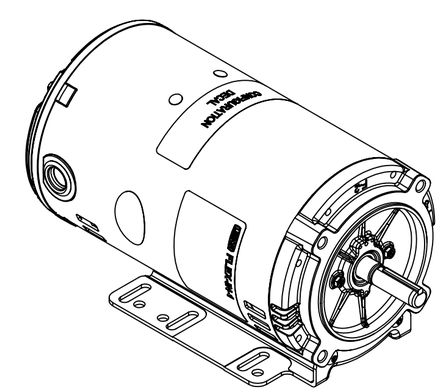

DRAWING REVISION G	REVISION BY M.P	REV DATE/© DATE 03/04/2024	TOLERANCES (EXCEPT AS NOTED): DEC. .X ±0.1 .XX ±0.02 .XXX ±0.005 .XXXX ±0.0005 / INCH / mm / ANGLE ±0.5° [±3] [±0.5] [±0.13] [±0.013]	DRAWN BY PRASHANTH	Regal Rexnord — Regal Beloit America, Inc.
REQUEST NUMBER ECR-0231732	APPROVED BY P.V.R	DATE 03/04/2024	REMOVE BURRS & BREAK SHARP EDGES: .003/.015 [.08/.38] X 45° CORNER FILLETS: R.02 [.5] MACHINED SURFACES: 125 / 3.2 INCH / mm mm DIMENSIONS IN [BRACKETS] ARE FOR REFERENCE ONLY	DATE 07/19/2022	
REQUEST NUMBER DESCRIPTION UPDATED AS PER ECR				APPROVED BY SN	DESCRIPTION OUTLINE 56-140FR, DP, C-FACE, BOLT ON
				DATE 07/19/2022	
				REFERENCE	MATERIAL / PROCESS/FINISH
				THIRD ANGLE PROJECTION	SIZE C / DRAWING NUMBER OL56100845-001 / SHEET 1 OF3

COPYRIGHT (PER REVISION DATE) REGAL BELOIT AMERICA, INC. ALL RIGHTS RESERVED. PROPRIETARY AND CONFIDENTIAL INFORMATION - THIS DOCUMENT IS THE PROPERTY OF REGAL BELOIT AMERICA, INC. ("OWNER") AND CONTAINS OWNER'S PROPRIETARY INFORMATION. ANY PERSON, CORPORATION OR OTHER FIRM RECEIVING IT IS DEEMED, BY RECEIVING IT, TO AGREE THAT IT, AND/OR ANY PART OF IT, SHALL NOT BE DISCLOSED TO ANY PERSON, CORPORATION OR OTHER ENTITY, DUPLICATED, AND/OR USED, EXCEPT AS EXPRESSLY APPROVED IN WRITING IN ADVANCE BY OWNER. THIS DOCUMENT SHALL BE RETURNED TO OWNER UPON REQUEST. IT MAY BE SUBJECT TO CERTAIN RESTRICTIONS UNDER APPLICABLE EXPORT CONTROL LAWS AND REGULATIONS.

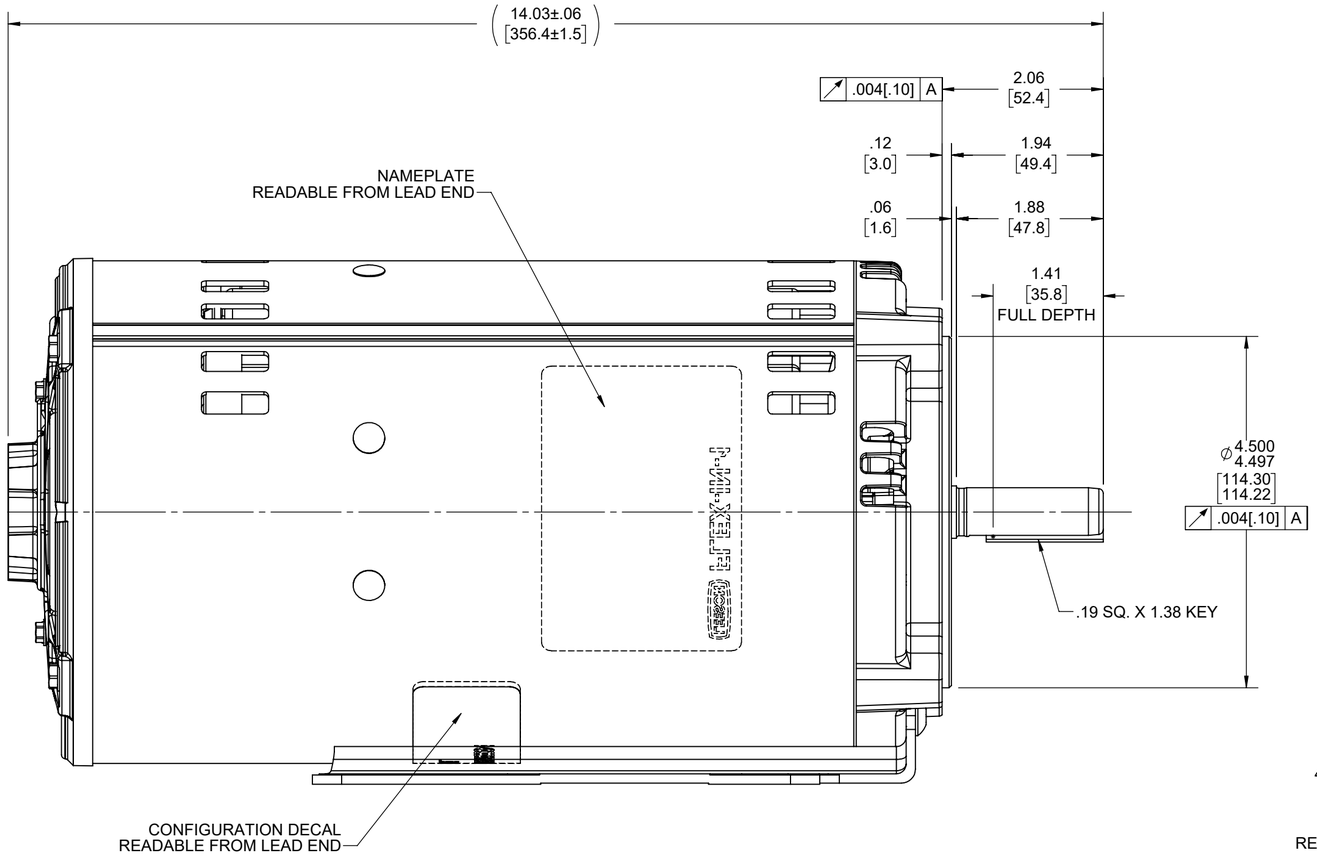

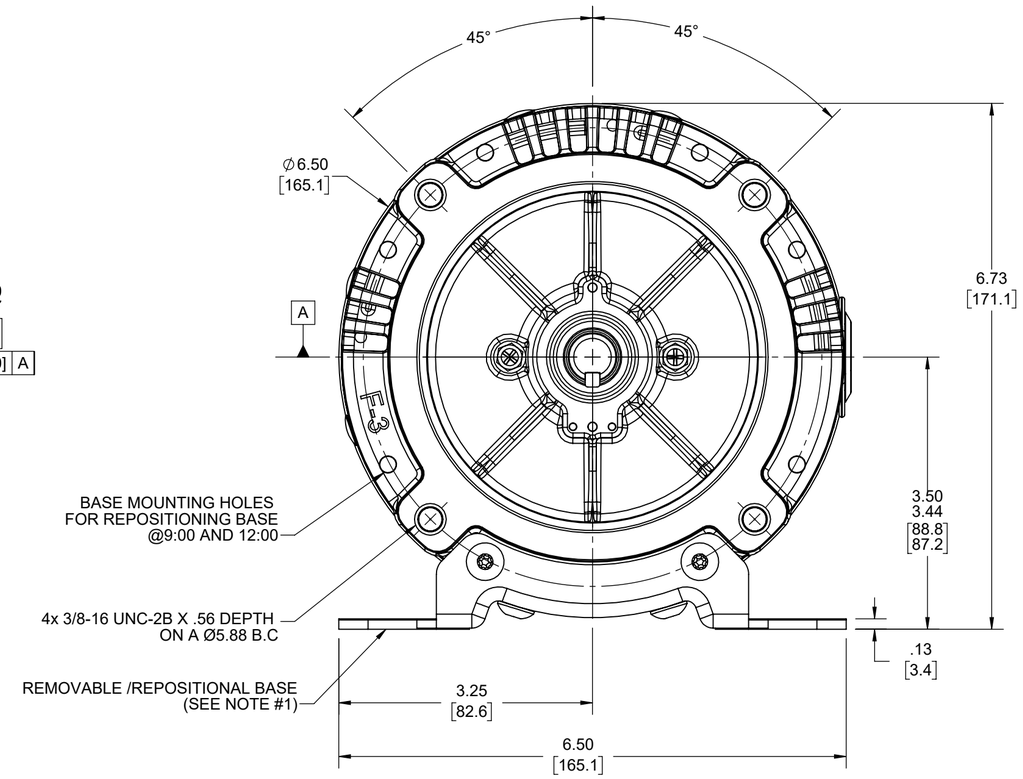

NOTES:

1) REMOVABLE / REPOSITIONAL BASE CAN BE REMOVED FOR C-FACE MOUNTING OR REPOSITIONED TO 12:00 OR 9:00 FACING SHAFT END OF MOTOR FOR NEMA F-1 OR F-3 CONDUIT BOX LOCATION.
2) KEY TO BE SHIPPED IN BAG WITH HOLE PLUGS AND BASE MOUNTING INSTRUCTION SHEET.

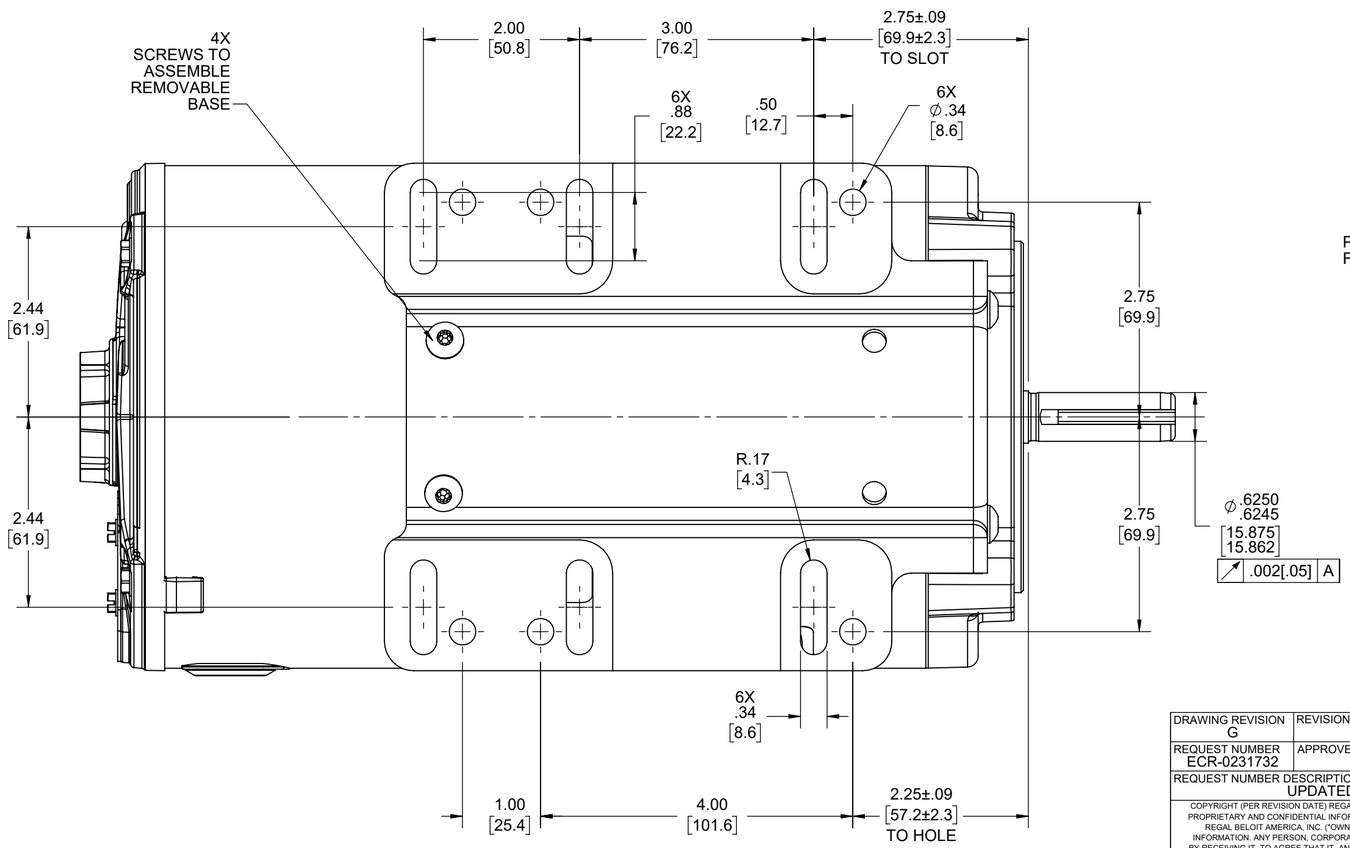

PLUGGED BASE MOUNTING HOLES
FOR REPOSITONING BASE @9:00 OR 12:00

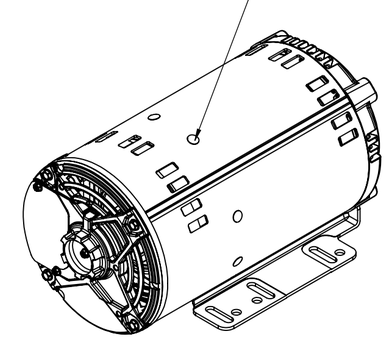

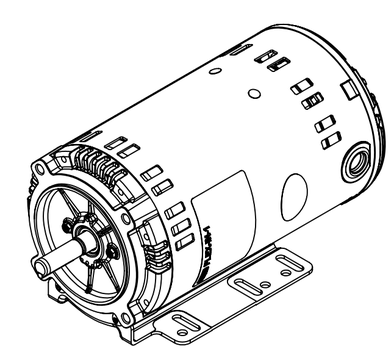

DRAWING REVISION G	REVISION BY M.P	REV DATE/© DATE 03/04/2024	TOLERANCES (EXCEPT AS NOTED): DEC. INCH mm ANGLE; .X ±0.1 [±3] ±0.5°; .XX ±0.02 [±0.5]; .XXX ±0.005 [±0.13]; .XXXX ±0.0005 [±0.013]	DRAWN BY PRASHANTH	Regal Rexnord — Regal Beloit America, Inc.
REQUEST NUMBER ECR-0231732	APPROVED BY P.V.R	DATE 03/04/2024	REMOVE BURRS & BREAK SHARP EDGES: .003/.015 [.08/.38] X 45°	DATE 07/19/2022	
REQUEST NUMBER DESCRIPTION UPDATED AS PER ECR			CORNER FILLETS: R.02 [.5]	APPROVED BY SN	DESCRIPTION OUTLINE 56-140FR, DP, C-FACE, BOLT ON
			MACHINED SURFACES: 125 INCH / 3.2 mm	DATE 07/19/2022	
			mm DIMENSIONS IN [BRACKETS] ARE FOR REFERENCE ONLY	REFERENCE	MATERIAL / PROCESS/FINISH
				THIRD ANGLE PROJECTION	SIZE C / DRAWING NUMBER OL56100845-001 / SHEET 2 OF3

COPYRIGHT (PER REVISION DATE) REGAL BELOIT AMERICA, INC. ALL RIGHTS RESERVED. PROPRIETARY AND CONFIDENTIAL INFORMATION - THIS DOCUMENT IS THE PROPERTY OF REGAL BELOIT AMERICA, INC. ("OWNER") AND CONTAINS OWNER'S PROPRIETARY INFORMATION. ANY PERSON, CORPORATION OR OTHER FIRM RECEIVING IT IS DEEMED, BY RECEIVING IT, TO AGREE THAT IT, AND/OR ANY PART OF IT, SHALL NOT BE DISCLOSED TO ANY PERSON, CORPORATION OR OTHER ENTITY, DUPLICATED, AND/OR USED, EXCEPT AS EXPRESSLY APPROVED IN WRITING IN ADVANCE BY OWNER. THIS DOCUMENT SHALL BE RETURNED TO OWNER UPON REQUEST. IT MAY BE SUBJECT TO CERTAIN RESTRICTIONS UNDER APPLICABLE EXPORT CONTROL LAWS AND REGULATIONS.

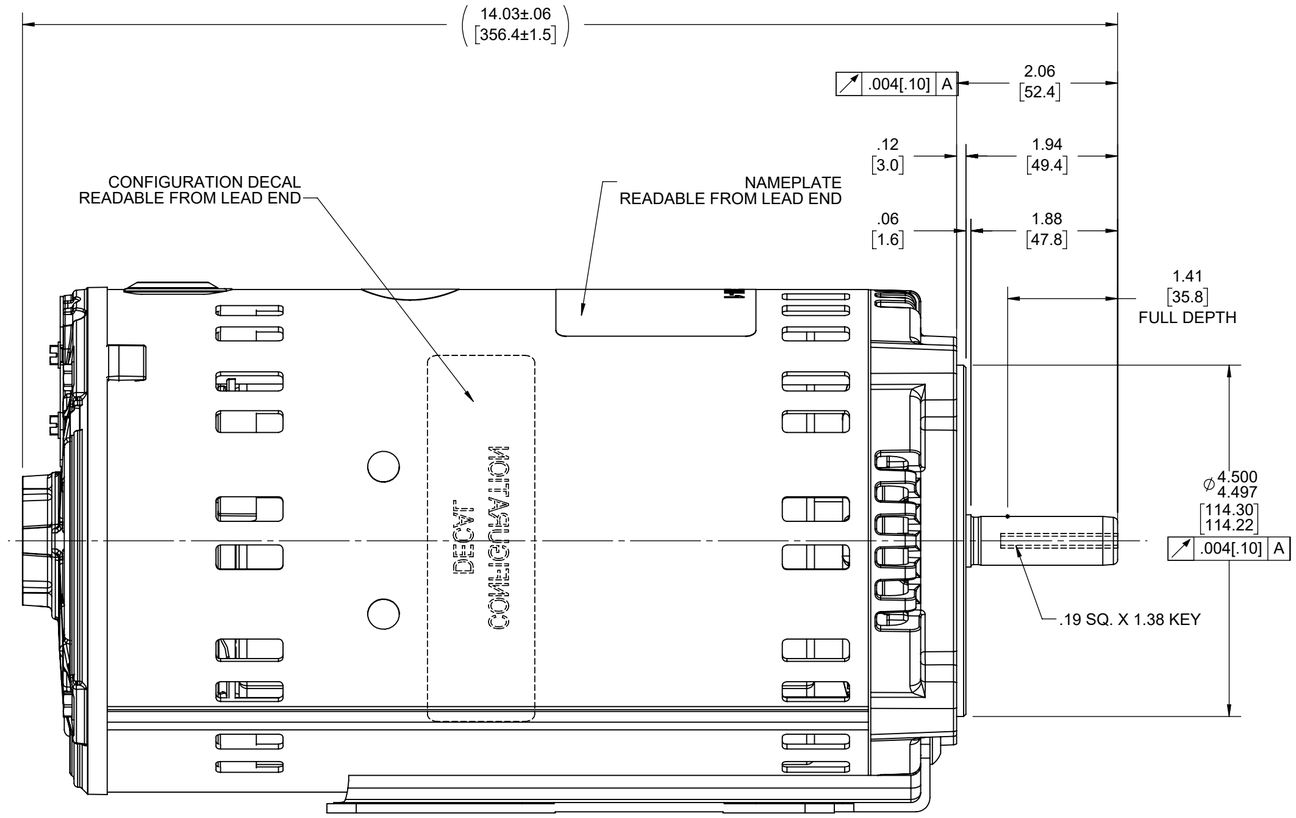

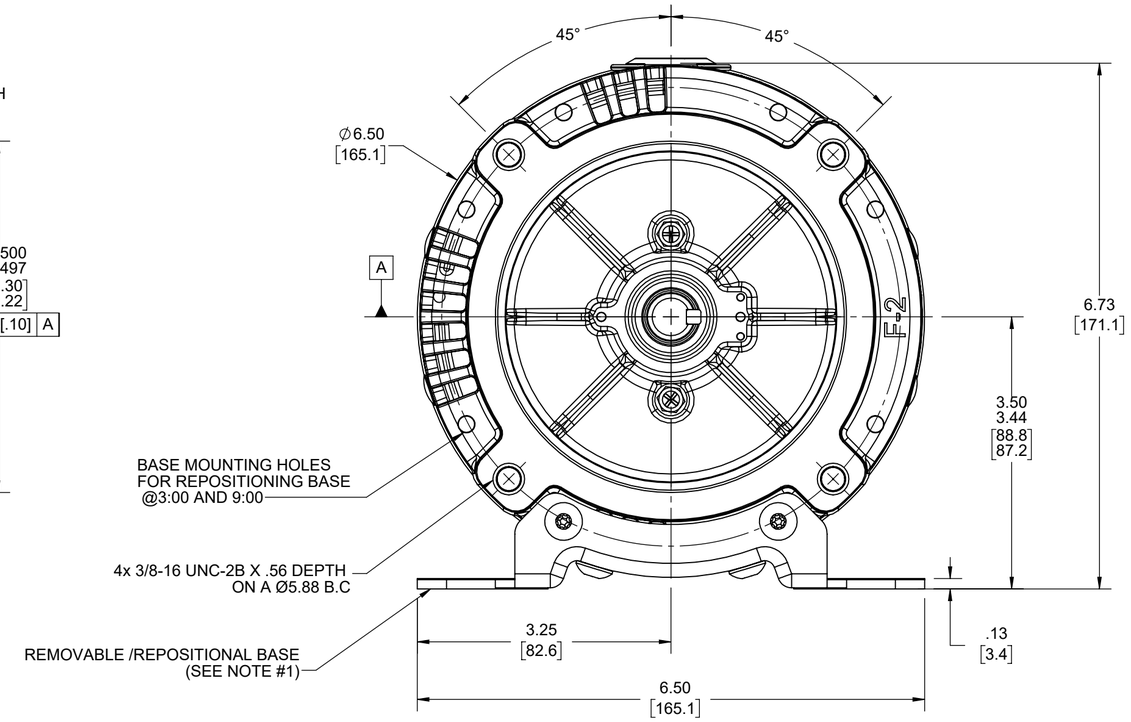

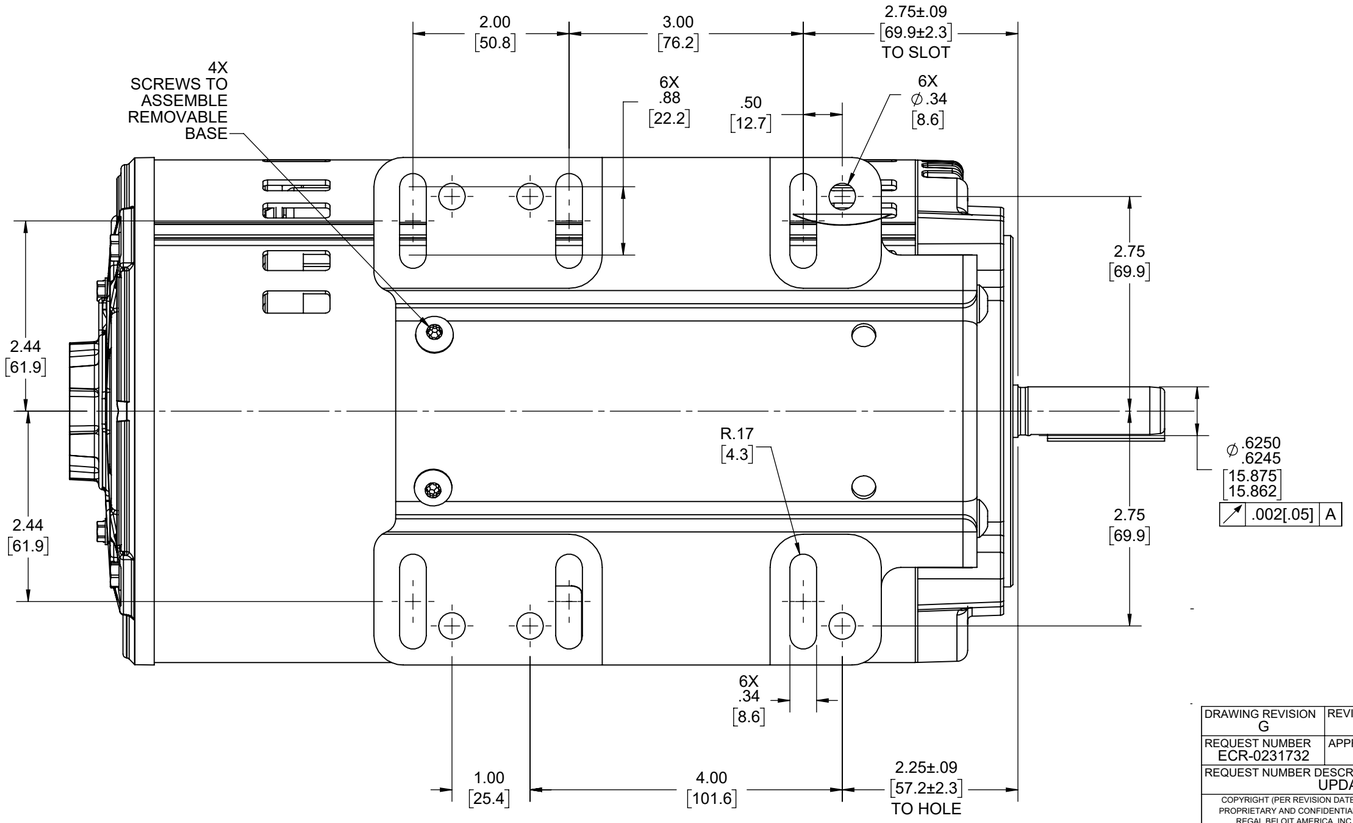

NOTES:

1) REMOVABLE / REPOSITIONAL BASE CAN BE REMOVED FOR C-FACE MOUNTING OR REPOSITIONED TO 9:00 OR 3:00 FACING SHAFT END OF MOTOR FOR NEMA F-1 OR F-2 CONDUIT BOX LOCATION.
2) KEY TO BE SHIPPED IN BAG WITH HOLE PLUGS AND BASE MOUNTING INSTRUCTION SHEET.

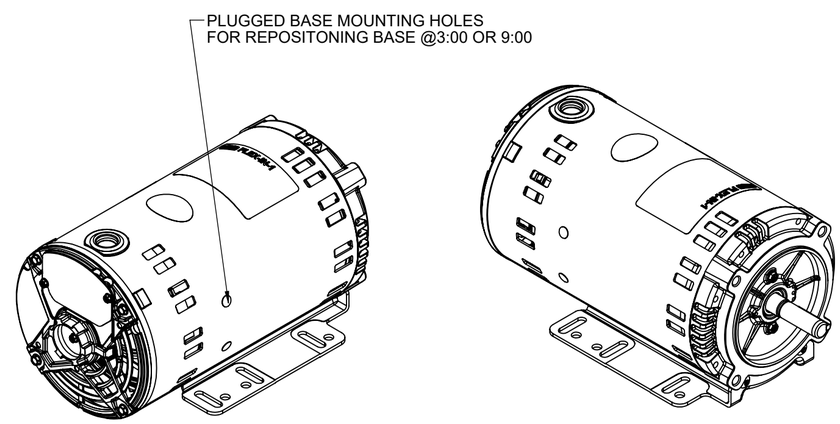

DRAWING REVISION G	REVISION BY M.P	REV DATE/© DATE 03/04/2024	TOLERANCES (EXCEPT AS NOTED): DEC. .X ±0.1 .XX ±0.02 .XXX ±0.005 .XXXX ±0.0005 / INCH / mm / ANGLE ±0.5° [±3] [±0.5] [±0.13] [±0.013]	DRAWN BY PRASHANTH	Regal Rexnord — Regal Beloit America, Inc.
REQUEST NUMBER ECR-0231732	APPROVED BY P.V.R	DATE 03/04/2024	REMOVE BURRS & BREAK SHARP EDGES: .003/.015 [.08/.38] X 45° CORNER FILLETS: R.02 [.5] MACHINED SURFACES: 125 / 3.2 INCH / mm	DATE 07/19/2022	
REQUEST NUMBER DESCRIPTION UPDATED AS PER ECR			mm DIMENSIONS IN [BRACKETS] ARE FOR REFERENCE ONLY	APPROVED BY SN	DESCRIPTION OUTLINE 56-140FR, DP, C-FACE, BOLT ON
				DATE 07/19/2022	
				REFERENCE	MATERIAL / PROCESS/FINISH
				THIRD ANGLE PROJECTION	SIZE C / DRAWING NUMBER OL56100845-001 / SHEET 3 OF3

COPYRIGHT (PER REVISION DATE) REGAL BELOIT AMERICA, INC. ALL RIGHTS RESERVED. PROPRIETARY AND CONFIDENTIAL INFORMATION - THIS DOCUMENT IS THE PROPERTY OF REGAL BELOIT AMERICA, INC. ("OWNER") AND CONTAINS OWNER'S PROPRIETARY INFORMATION. ANY PERSON, CORPORATION OR OTHER FIRM RECEIVING IT IS DEEMED, BY RECEIVING IT, TO AGREE THAT IT, AND/OR ANY PART OF IT, SHALL NOT BE DISCLOSED TO ANY PERSON, CORPORATION OR OTHER ENTITY, DUPLICATED, AND/OR USED, EXCEPT AS EXPRESSLY APPROVED IN WRITING IN ADVANCE BY OWNER. THIS DOCUMENT SHALL BE RETURNED TO OWNER UPON REQUEST. IT MAY BE SUBJECT TO CERTAIN RESTRICTIONS UNDER APPLICABLE EXPORT CONTROL LAWS AND REGULATIONS.

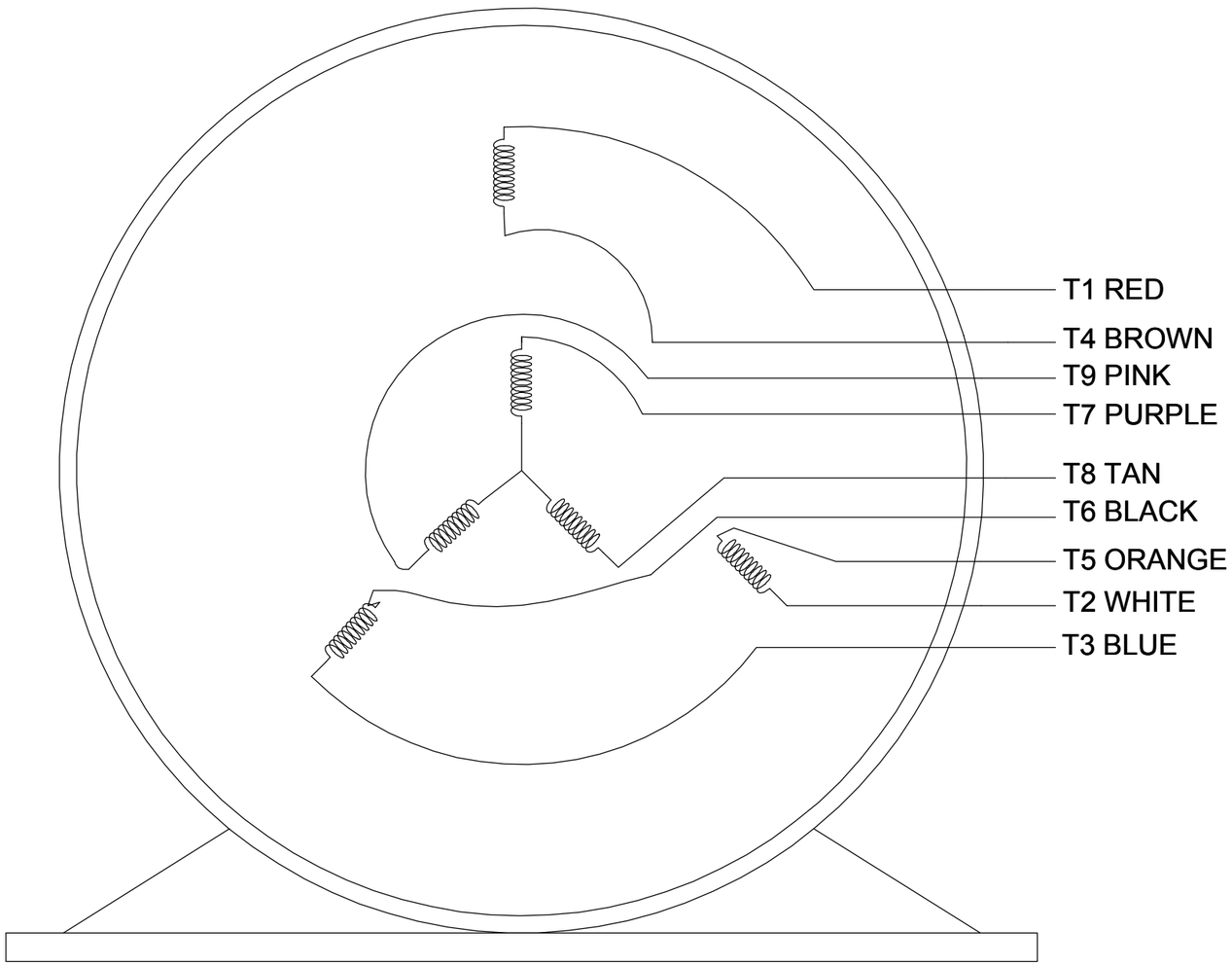

VIEW OF TERMINAL END

NOTE:

1. TO REVERSE ROTATION, INTERCHANGE ANY TWO LINE CONNECTIONS TO L1, L2, OR L3.
2. CONNECTION DIAGRAM-NAMEPLATE
   DD10123-001 - CCWLE
   DD10199-001 - CWLE

CCW LOW VOLTAGE

001

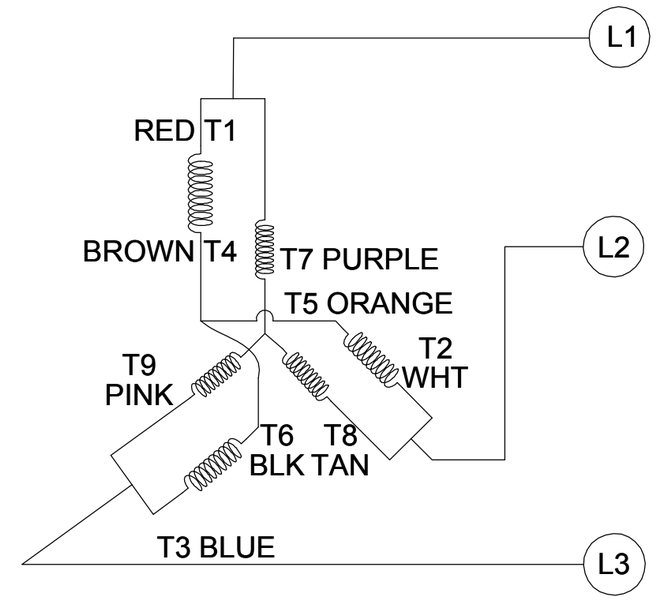

CCW HIGH VOLTAGE

002

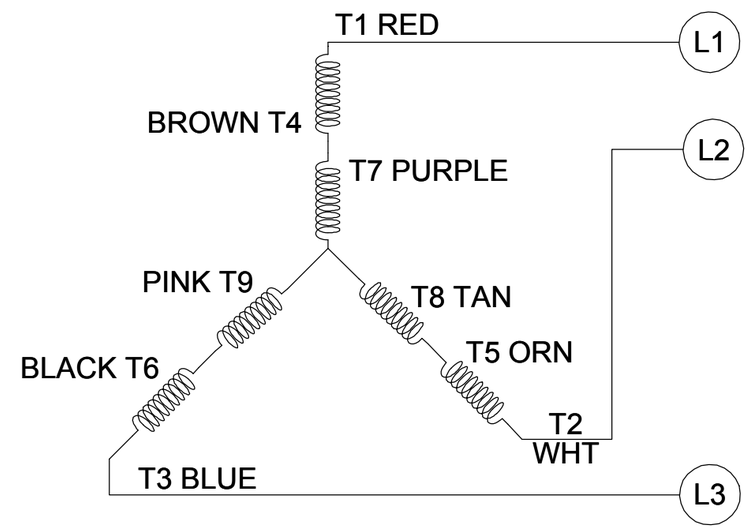

DRAWING REVISION D	REVISION BY SHESHI	DATE 01/11/2019
ECO ECO-0159881	APPROVED BY CD	DATE 01/11/2019
ECO DESCRIPTION ADDED DD10199-001		

COPYRIGHT REGAL BELOIT AMERICA, INC. ALL RIGHTS RESERVED.
PROPRIETARY AND CONFIDENTIAL INFORMATION - THIS DOCUMENT IS THE PROPERTY OF REGAL BELOIT AMERICA, INC. ("OWNER") AND CONTAINS OWNER'S PROPRIETARY INFORMATION. ANY PERSON, CORPORATION OR OTHER FIRM RECEIVING IT IS DEEMED, BY RECEIVING IT, TO AGREE THAT IT, AND/OR ANY PART OF IT, SHALL NOT BE DISCLOSED TO ANY PERSON, CORPORATION OR OTHER ENTITY, DUPLICATED, AND/OR USED, EXCEPT AS EXPRESSLY APPROVED IN WRITING IN ADVANCE BY OWNER. THIS DOCUMENT SHALL BE RETURNED TO OWNER UPON REQUEST. IT MAY BE SUBJECT TO CERTAIN RESTRICTIONS UNDER APPLICABLE EXPORT CONTROL LAWS AND REGULATIONS.

TOLERANCES UNLESS OTHERWISE SPECIFIED:

DEC.	INCH	mm	ANGLE
.X	±0.1	[±2.5]	±0.5°
.XX	±0.01	[±0.25]	
XXX	±0.005	[±0.127]	
.XXXX	±0.0005	[±0.0127]	

REMOVE BURRS & BREAK SHARP EDGES: .003/.015 [.076/.381]
CORNER FILLETS: .02 [.51]
MACHINED SURFACES: 125 INCH / 3.2 mm
mm SHOWN IN [BRACKETS]

DRAWN BY G. RODRIGUEZ	Regal Beloit America, Inc.
DATE 12-01-2017	
APPROVED BY J. A. MORENO	DESCRIPTION CONN DIAGRAM-EXTERNAL
DATE 12-01-2017	
REFERENCE CDTD103	MATERIAL / PROCESS/FINISH
THIRD ANGLE PROJECTION	SIZE B / DRAWING NUMBER CDTD127 / SHEET 1 OF 1

EC Declaration of Conformity

The undersigned representing
the manufacturer:

Regal Beloit America
1946 West Cook Road
Fort Wayne, IN 46818

and the authorized representative
established within the Community:

Regal Beloit Italy
Via Modena, 18
24040 Ciserano(BG) - Italy

are committed to providing customers with products that comply with applicable regulations and international protocols to which they are subject, including the requirements of the European Parliament Directive on the Harmonization of the laws relating to electrical equipment designed for use within certain voltage limits (2014/35/EU).

Regal Beloit America declares that the following product(s), to which this declaration relates, are in conformity with the relevant sections of the EC standards listed below.

This statement supersedes any statements previously issued pertaining to the product(s) listed below and is subject to change without notice.

Model No : 056T17D15850

(Model No. may contain prefix and/or suffix characters)

Catalog No : FX32BK003

Rework No : N/A

Directives :

Low Voltage Directive 2014/35/EU

Harmonized Standards Used :

EN 60034-1: 2010 (IEC 60034-1: 2010)
EN 60034-5: 2001/A1:2007 (IEC 60034-5: 2000/A1:2006)

Authorized Representative:

Zach Stauffer
Vice President, Engineering

Authorized Representative in the Community:

Stefano Casiraghi
Technology Director, Engineering

Created on 07/08/2025

CE 25